Bowl feeder

BF20 / BF25 / BF30
BF35 / BF40 / BF50



Translation of operating and installation instructions

Copyright by Afag GmbH

This operation instruction applies to:

Type		Order number					
		BF20	BF25	BF30	BF35	BF40	BF50
Right 12°	230 V / 50 Hz	50028117	50028101	50013729	50017360	50026172	50028132
	115 V / 60 Hz	50042193	50042198	50042202	50042206	50042210	50042214
Left 12°	230 V / 50 Hz	50028118	50028100	50013728	50017358	50026171	50028133
	115 V / 60 Hz	50042194	50042199	50042203	50042207	50042211	50042215
Right 18°	230 V / 50 Hz	50042197	50030815	50027880	50029657	50030826	50031622
	115 V / 60 Hz	50042195	50042200	50042204	50042208	50042212	50042216
Left 18°	230 V / 50 Hz	50032808	50030814	50027872	50029648	50030825	50031621
	115 V / 60 Hz	50042196	50042201	50042205	50042209	50042213	50042217

Version of Documentation: BA_BF20-50_R06.3_EN.docx

Release: R06.3

Date: 07/01/2021

Following US patents are registered or announced:

- Vibrating spiral conveyor (U.S. Patent No.7,143,891)
- Drive unit for a vibrating spiral conveyor (U.S. Patent No.7,299,913)

Table of contents:

1 Safety instructions 4

1.1 Notes on symbols and instructions 4

1.2 Basic safety information 5

1.3 Appropriate use 5

1.4 Notes for Pacemakers and Defibrillators 6

2 Description of the device 6

2.1 General 6

2.2 Function description 7

2.3 Definition of the feed direction 7

2.4 Technical data 8

3 Assembly instructions 10

3.1 Transport 10

3.2 Installing the unit 10

3.3 Fixing the bowl 11

3.3.1 Central Fixing 11

3.3.2 Radial Fixing 12

3.4 Power supply 13

4 Operating instructions 14

4.1 Standard operation 14

4.2 Settings for the specific device 14

4.3 Torques 16

5 Maintenance instructions 17

5.1 Replacing the leaf springs 17

5.2 Adjusting the magnet gap 18

5.3 Wear parts and Spare parts 19

6 Accessories 21

6.1 Adjusting tools 21

6.2 Controller 21

6.3 Address for orders 22

7 Disposal 22

1 Safety instructions

1.1 Notes on symbols and instructions

Symbols: Assembly and commissioning must be carried out by qualified personnel only and according to these operating instructions.

Please observe the meaning of the following symbols and notes. They are grouped into risk levels and classified according to ISO 3864-2.

DANGER	
	**Indicates an immediate threatening danger.** **Non-compliance with this information can result in death or serious personal injuries (invalidity).**

WARNING	
	**Indicates a possible dangerous situation.** **Non-compliance with this information can result in death or serious personal injuries (invalidity).**

CAUTION	
	**Indicates a possibly dangerous situation.** **Non-compliance with this information can result in damage to property or light to medium personal injuries.**

NOTE	
	**Indicates general notes, useful operator tips and operating recommendations which don't affect safety and health of the personnel.**

1.2 Basic safety information

These operating instructions provide the information operators require to use the BF bowl feeder safely. These operating instructions, and in particular the safety information, must be observed by anyone working on and with the BF. The applicable on-site accident prevention rules and regulations must also be observed.

These operating instructions must always be kept ready to hand where the BF is operated.

1.3 Appropriate use

Afag BF bowl feeders are designed only for storing, transporting, separating and sorting workpieces of varying dimensions, shapes and material variants. Appropriate use also includes observation of all Notes in these operating instructions.

WARNING	
	**The BF may not be used:** a) in damply and wet area b) in temperature lower than 10°C or higher than 45°C c) in areas where readily flammable media are present d) in areas where readily explosive media are present e) in heavy polluted or dust- laden area f) in aggressive area (e.g. saliferous atmosphere)

None modification or reconstruction are allowed. The operations described in chapter 3.3 Fixing the bowl and in chapter 4.1 Standard operation are excluded from this arrangement.

NOTE	
	**Any other use is inappropriate and will result in the warranty becoming null and void.**

See also our General Terms of Business.

1.4 Notes for Pacemakers and Defibrillators

Afag vibration conveyors are tested in accordance with regulation 15 of the German Statutory Accident Insurance Association [Deutsche Gesetzliche Unfallversicherung, DGUV] (previously BGV B11 of German Accident Prevention Regulations). The permissible values of exposure area 2 are not exceeded, therefore no measures are required pursuant to Section 4 (2) of the DGUV regulation 15. The definitions of Section 12 “Indirect Effects, Medical Implants” remain unaffected by the above.

The alternating magnetic fields that occur in the immediate vicinity of certain vibration conveyors may affect the proper functions of active implants, i.e. pacemakers and defibrillators. Anyone with active medical implants, for which no individual risk assessment has been provided, must observe the specified safety distances to the vibration conveyors. The distances each relate to the position of the upper body and the active medical implant relative to the field source.

Type	Safety Distance
BF10-40	--
BF50	5cm

2 Description of the device

2.1 General

The BF bowl feeder is used in conjunction with a bowl for storing, transporting, separating and sorting bulk goods. The transport motion is generated by vibration. The parts are moved in the transport direction by micro-jumps.

The mass and the moment of inertia of the bowl used should not exceed the values and tolerances specified in section 2.3 as otherwise the goods will not be transported as well as possible.

The BF is designed in such a way that if the tolerance ranges for the mass moment of inertia and mass specified in section 2.3 are observed, no mechanical tuning is required.

If these tolerances are exceeded, mechanical tuning by fitting or removing leaf springs will be necessary. Please note, however, that in this case perfect transport will no longer be guaranteed. In addition the vibration force compensation system will be adversely affected in this case, which means that more vibrations will be guided into the substructure and this may affect the area around the machine.

NOTE	
	**BF feeders are to be operated in conjunction with an Afag control unit. This is the only combination that will guarantee perfect transport characteristics.**

2.2 Function description

Afag BF bowl feeders use a vibration force compensation system based on the counter-vibration principle. In this case a utility weight (1) vibrates exactly opposite to a counter-weight (2). The utility weight is essentially formed by the mounting plate, the bowl and the magnetic anchor, the counterweight is formed by the counter ring and the vibration magnet. The utility and counter weights are secured to a base ring (4) by leaf spring assemblies (3). If the mass moments of inertia and mass specified in section 2.4 are not exceeded when the utility and counterweights vibrate, exactly equal reaction forces are generated, which are then transferred to the base ring (4) through the of leaf spring assemblies (3). As a result of this opposite vibration of the utility weight and counter weight, these reaction forces almost totally cancel each other on the base ring (4).

Figure 1: *BF without casing*

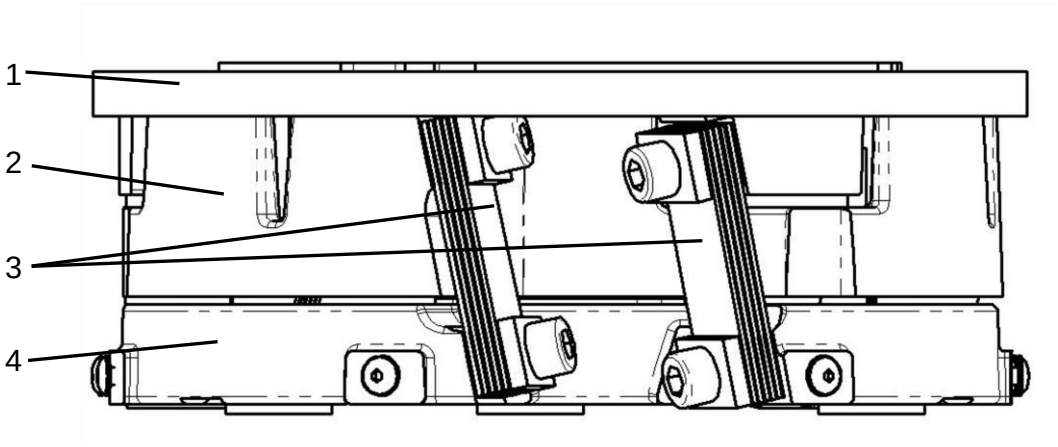

2.3 Definition of the feed direction

The feed directions for the BF are defined as follows:

***Left-hand (L)**, in **anti-clockwise** direction*

***Right-hand (R)**, in **clockwise** direction*

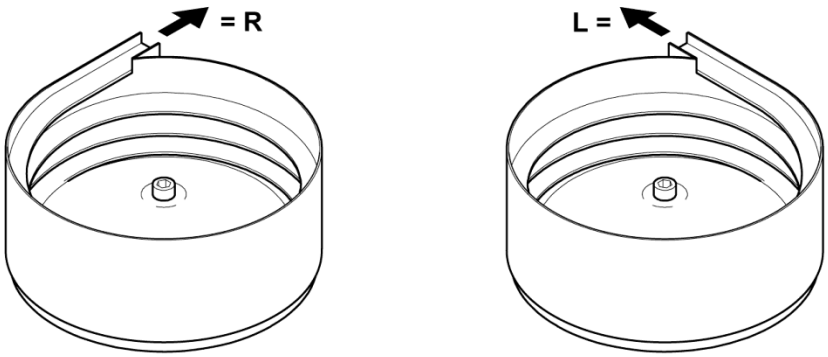

Figure 2

2.4 Technical data

Figure 3: *Dimension sheet for BF08-15*

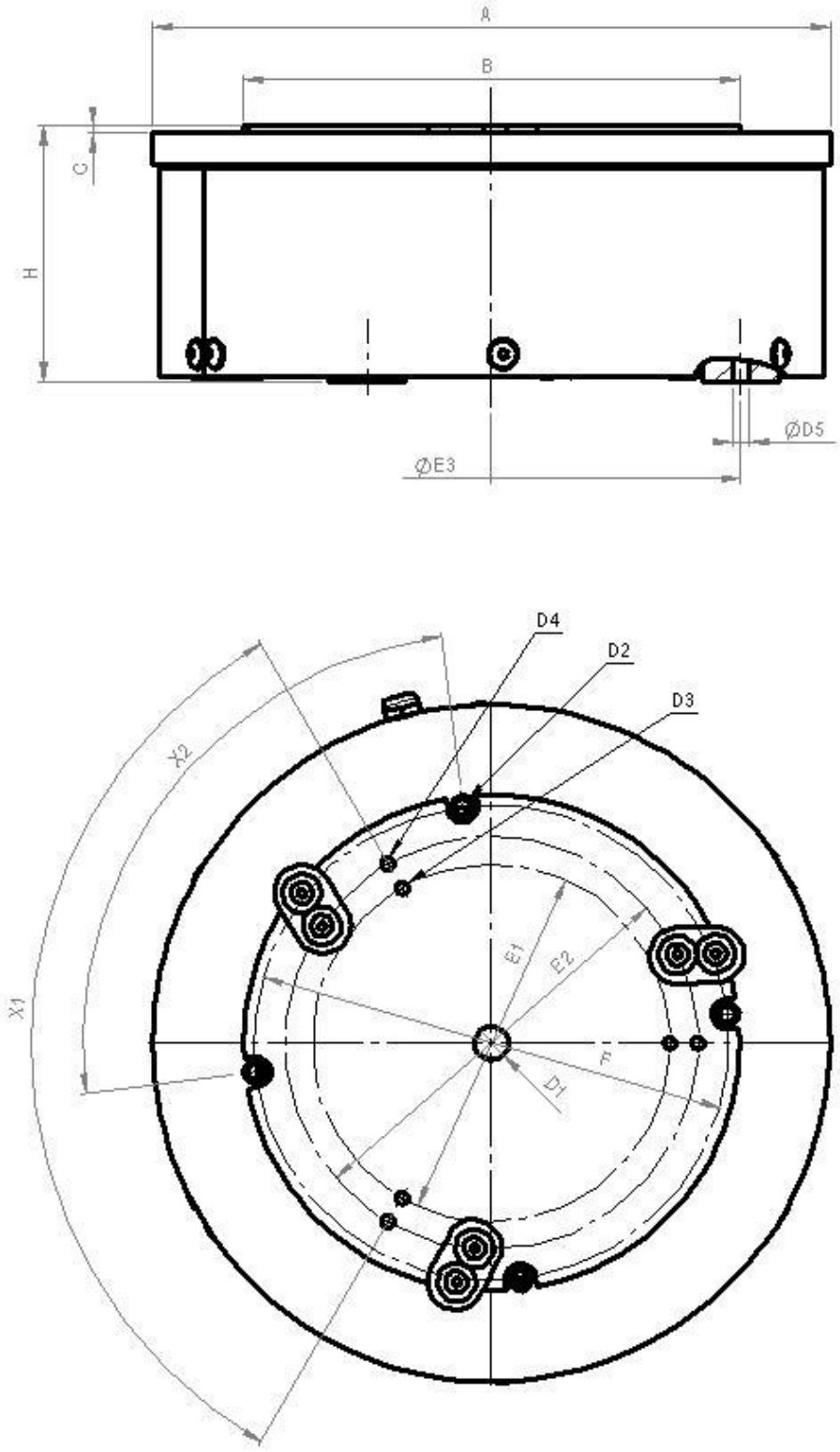

Table 1: *Technical data*

Models		Units	BF 20	BF 25	BF 30	BF 35	BF 40	BF 50
Dimension	A	[mm]	180	224	265	305	345	440
	B	[mm]	142	194	194	294	294	340
	C	[mm]	2	2	3	3	3	5
	D1	-	M8	M10	M10	M10	M12	M16
	D2	-	- - -	- - -	4 x M6	4 x M6	4 x M6	24 x M6
	D3	[mm]	3 x 4H7	3 x 5H7	3 x 5H7	3 x 5H7	3 x 5H7	- - -
	D4	[mm]	- - -	3 x 5H7	3 x 5H7	3 x 5H7	- - -	- - -
	D5	-	3 x M6	3 x M6	3 x M8	3 x M8	3 x M8	3 x M8
	E1	[mm]	87	100	140	162	214	- - -
	E2	[mm]	- - -	116	162	214	- - -	- - -
	E3	[mm]	120	120	195	195	195	280
	F	[mm]	- - -	- - -	186	186	320	320 / 400
	H	[mm]	90	93	100	103	112	150
	X1	[°]	3 x 120°	3 x 120°	3 x 120°	3 x 120°	3 x 120°	3 x 120°
	X2	[°]	4 x 90°	4 x 90°	4 x 90°	4 x 90°	4 x 90°	12 x 30°
Max. mass moment of inertia		[kg*dm²]	1,0 ±10%	2,2 ±10%	4,5 ±10%	8,8 ±10%	17,0 ±10%	65,0 ±10%
Max. bowl weight		[kg]	2,0 ±30%	3,0 ±30%	4,0 ±30%	6,0 ±30%	9,0 ±30%	20,0 ±30%
Weight		[kg]	7,3	12,0	15,4	23,3	34,5	56,6
Rating		[VA]	69	69	135	135	180	950
Protection type		IP	54					
Vibration force compensation		-	yes					
Electric version		[V / Hz]	230 / 50 or 115 / 60					
Vibration frequency		[1/min]	6000 / 7200					
Direction of rotation		-	right / left					
Leaf spring angle		[°]	12° / 18°					
Environmental conditions for operation: Temperature range		[°C]	+10 to +45					
Noise emission: Continuous noise pressure level (without transported material)		[dB]	<70					
Measuring height/measuring distance		[m]	1,6 / 1					
Measurement direction with respect to the noise source		[°]	90					
Measurement method		-	A evaluation					

3 Assembly instructions

3.1 Transport

⚠ WARNING	
	**Improper use of transport means (industrial trucks, cranes, technical aids, sling gear etc.) may lead to bruises and other injuries.** **Required behaviour:** - **Observe and follow the transport and maintenance instructions** - **Proper use of transport means**

⚠ CAUTION	
	**Only handle the bowl feeder by its base ring during transport. Neither the bowl nor the control elements may be used to lift the feeder.**

3.2 Installing the unit

Each BF has 3 rubber-metal buffers so that the bowl feeder can be fastened to the substructure (see Figure 4). See section 2.4, Table 1, for the mounting hole dimensions.

Ideally the devices must be mounted on a plate that can be height-adjusted and rotated around a central column. Suitable substructure components are available from Afag.

Figure 4: *Drive unit mounting*

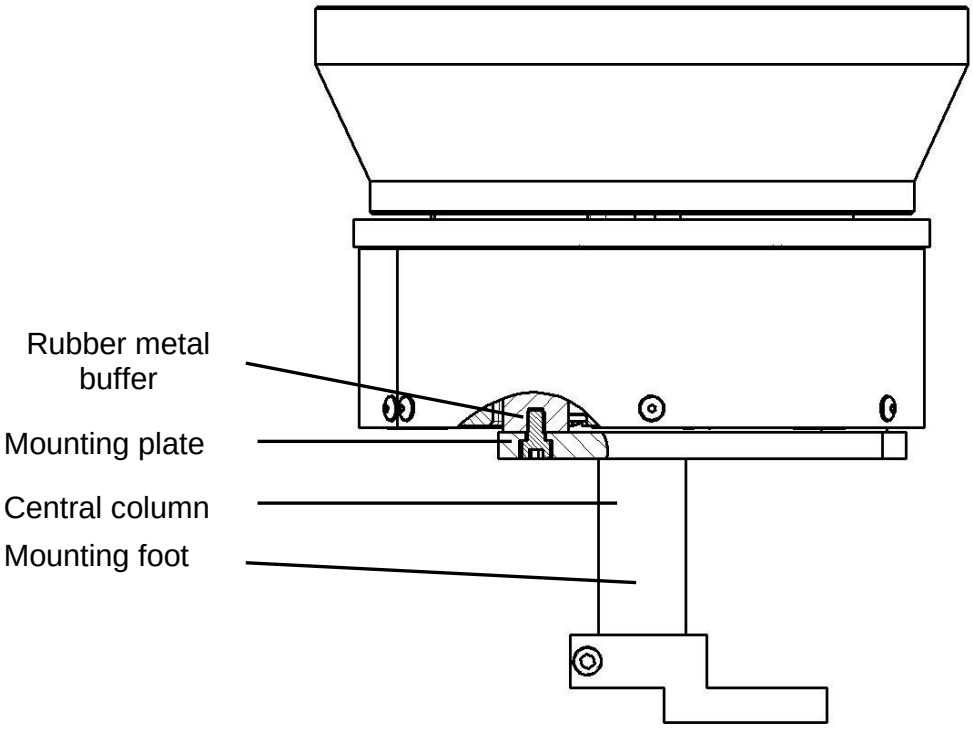

Another possibility is to mount the device straight on to a base plate.

Suitable Afag standard parts are available for complete station assemblies using Afag linear feeders.

3.3 Fixing the bowl

3.3.1 Central Fixing

The bowl is secured to the mounting plate provided for it on the BF bowl feeder using a central mounting screw. The mounting screw must be tightened using the torque specified in

Table 2 in order to generate the required frictional locking.

There are adjusting holes on the mounting plate so that the bowl can be positioned precisely on the BF drive unit. This means that there is no need to repeat the alignment of the interface on the bowl discharge when the bowl is changed or if a bowl that has been removed for cleaning or repair is refitted.

Feeder bowls that are mounted differently (at the edges, for example) require special adapter plates.

To ensure perfect operation of the equipment, do not exceed the maximum mass moment of inertia and feeder bowl weights. They are dependent on the design of the feeder bowls.

Figure 5: *central bowl mounting*

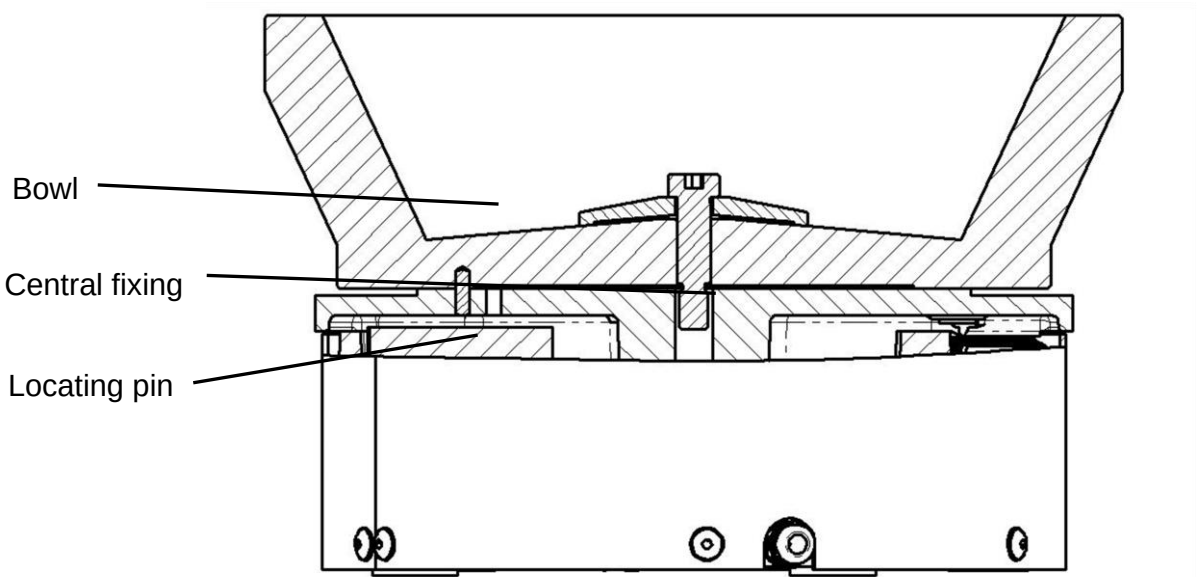

Table 2: *Tightening torques for the bowl mounting*

Type	Unit	BF20	BF25	BF30	BF35	BF40	BF50
Tightening torque	[Nm]	15	30	30	30	50	80

3.3.2 Radial Fixing

Normally big bowls are not fixed in the centre. These kinds of bowls should be mounted with some screw, positioned radial to the centre. See section 2.3 Table 1, for the mounting hole dimensions.

The hole in the middle of the drive can be used to fix the bottom of bowl or to position the bowl according the drive.

Figure 6: *radial bowl mounting*

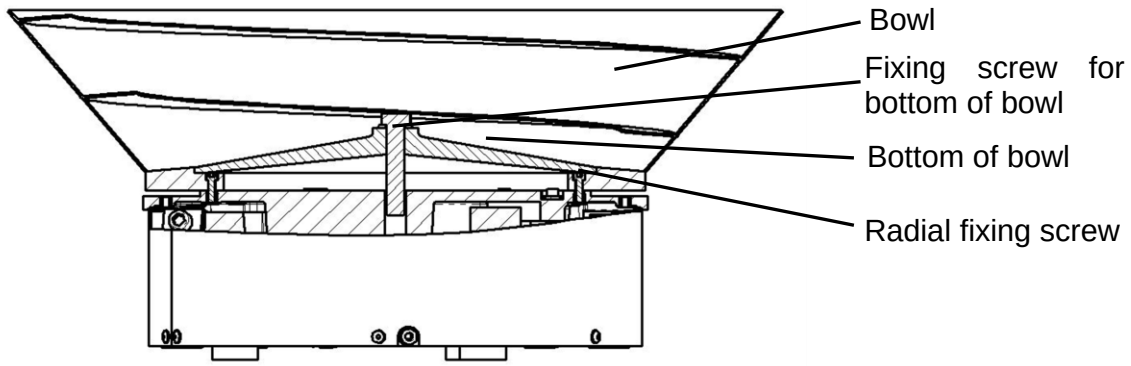

3.4 Power supply

WARNING	
	▪ **Any work performed on the electrical supply may only be performed by trained, authorised, qualified personnel!** ▪ **The power supply must be protected by an FI switch (provided by the customer).** ▪ **The bowl feeder may only be operated with the power supply specified on the name plate.**

The control device IRG1-S is used for the activation of the bowl feeder.

For the large drives BF50 with 115V mains voltage a suitable control unit with 12A RMS load capacity must be used instead of the IRG1-S.

The MSG801 or MSG802 can also be used. Please note that an additional CEE connector plug is required for the MSG controllers (Order number: 11006982)

Installation of the plug is only to be carried out by technically qualified personnel.

Figure 7: *End of the wire for additional plug*

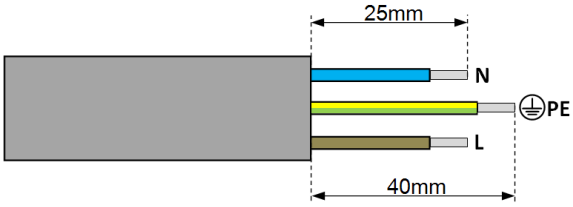

4 Operating instructions

4.1 Standard operation

No further settings are required for standard operation once the control is switched on. An uninterrupted operation only requires the re-filling of the feeder bowl.

⚠ CAUTION	
	**The bulk material must be filled into the middle of the conveyor bowl. Otherwise the orientation system might be damaged or the required capacity might not be achieved as falling parts can get jammed in the orientation system.**

⚠ CAUTION	
	**Under certain circumstances an inadmissible noise level may occur (e.g. when opening the cover of the noise protection hood for filling in parts).** **Required behaviour:** **Wear ear protection when working at critical sound levels**

4.2 Settings for the specific device

The BF is a spring and mass vibration system that operates on the basis of its resonance properties. All basic devices are set by the manufacturer to the mass moment of inertia and weight values specified in section 2.4. If you comply with these values and tolerances, there will be no need to adjust the BF.

However, if you fail to comply with these values, the inherent frequency of the BF will have to be adjusted accordingly. Once the assembled feeder bowl has been mounted, the inherent frequency of the drive unit must be tuned to the feeder bowl. The bowl feeder must always be adjusted **'sub- critically'**, in other words, the **inherent frequency** must be approximately 5% **above** the **exciter frequency**. For a 100 Hz feeder this translates to an inherent frequency of around 104 Hz (6000 vibrations per minute), for a 120 Hz feeder to one of around 126 Hz (7200 vibrations per minute).

The fully set-up feeder bowl must be bolted to the basic device to allow the drive unit to be tuned. Proceed as follows to tune the drive unit to the specific application:

1. Unscrew the cover from the BF and mount the feeder bowl on to the drive unit.
2. Place a part into the feeder bowl and use the control unit to set a low transport speed.
3. Slowly loosen the lower mounting screw at one of the three spring assemblies on the bowl side and watch the transport speed of the part inside the bowl.
4. If the transport speed increases initially at first and then decreases again as the screw is loosened further, the drive unit is correctly tuned and the inherent frequency is slightly above the exciter frequency.

5. If the transport speed only increases when the screw is loosened and does not decrease again even when the screw is fully loosened, the drive unit is too rigidly tuned. In this case, remove a leaf spring and retune the frequency. You must remove as many leaf springs as necessary until the properties described in point 4) are achieved. If you have to remove several leaf springs, they must be removed as evenly as possible from the three spring assemblies on the bowl side.
6. If the transport speed decreases immediately while the screw is being loosened, the drive unit is tuned too softly. In this case, fit a leaf spring and retune the frequency. You must add as many leaf springs as necessary until the properties described in point 4) are achieved. If you have to add several leaf springs, they must be added as evenly as possible to the three spring assemblies on the bowl side. The fitted leaf springs must be clean and dry.

Only one spring assembly must be dismantled at a time. To tighten the screw after tuning the bowl feeder, apply the appropriate installation tool (see section 0, Table 7: Adjusting tools) in order to prevent the bowl feeder from twisting. The spring assemblies connected to the counter weight must not be loosened.

After you have adjusted the natural frequency, the magnet gap must be checked.This can easily become maladjusted whilst you are fitting or removing springs. If this is the case the magnet gap must be reset as described in section 5.2 Adjusting the magnet gap

4.3 Torques

Tightening torques M_{Sp} in Nm for shank screws with metric ISO control threads and head supports according to DIN 912 or DIN 931:

Screw	Tightening torques M_{Sp} in Nm		
	Strength class 8.8	Strength class 10.9	Strength class 12.9
M4	2,8	4,1	4,8
M5	5,5	8,1	9,5
M6	9,5	14,0	16,5
(M7)	15,5	23,0	27,0
M8	23,0	34,0	40,0
M10	46,0	68,0	79,0
M12	79,0	117,0	135,0
M14	125,0	185,0	215,0
M16	195,0	280,0	330,0
M18	280,0	390,0	460,0
M20	390,0	560,0	650,0
M22	530,0	750,0	880,0
M24	670,0	960,0	1120,0
M27	1000,0	1400,0	1650,0
M30	1350,0	1900,0	2250,0

by: Dubbel (18th edition), page G175

5 Maintenance instructions

A type BF bowl feeder essentially requires no servicing. The leaf springs, however, may oxidize in certain conditions of use, thus affecting the vibration behavior in the long run. In these cases the leaf springs must be removed and cleaned or be changed. In rare cases the leaf springs must be completely replaced.

5.1 Replacing the leaf springs

Only one spring assembly may be dismantled at a time when removing the leaf springs. Before undoing the screws the centering brackets (Table 7: *Adjusting tools*) must be secured to the drive unit (see Figure 8). These secure the counterweight and mounting plate and thus prevent these parts sagging or moving.

⚠ CAUTION	
	**The leaf springs must not be oiled or greased as this would make the springs sticky and in turn adversely affect the vibration response.**

The number of leaf springs in a spring assembly and the structure of the spring assembly installed must be identical to the original spring assembly. Only then will the device function correctly.

Figure 8: *Spring assembly and centring bracket*

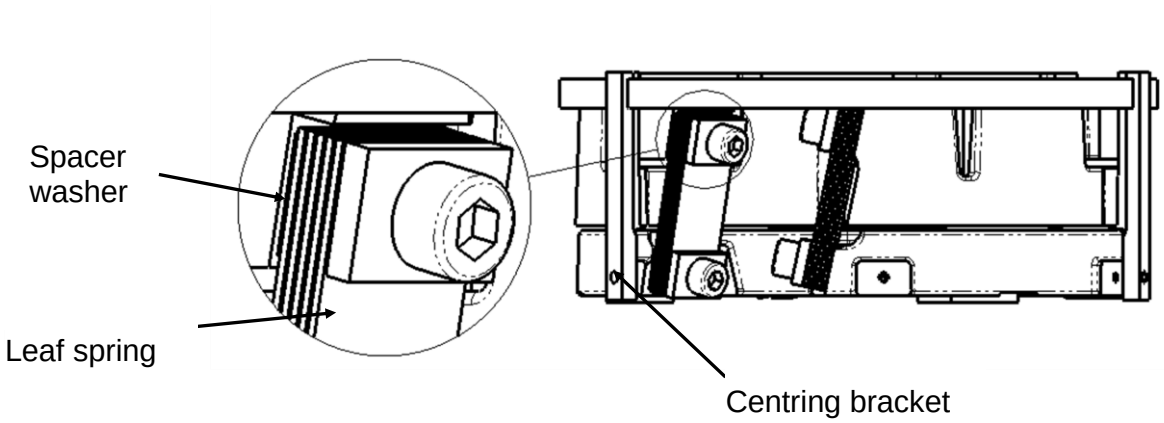

The screws must be tightened using the torque shown in Table 3. During tightening the screws the spacer washers may not be turned.

Table 3: *Tightening torques for spring installation*

Type	Unit	BF20	BF25	BF30	BF35	BF40	BF50
Tightening torque	[Nm]	40	40	79	79	79	135

5.2 Adjusting the magnet gap

To adjust the magnet gap between the oscillating magnets, the casing must be removed and the securing screws (see Figure 9, Figure 10) of the magnetic anchor) undone. Then the appropriate spacer gauges (Table 7: Adjusting tools) must be slid into the openings provided on the counterweight. It must be ensured that a spacer gauge has been inserted to each oscillating magnet and that it juts out of it horizontally. Then apply 24 VDC to the drive unit which will cause the magnets and the anchors to pick up. The required magnet gap will be set by the inserted spacer gauges. Now the securing screws must be tightened using the appropriate torque (Table 4: Magnet gap and tightening torque). When all the magnetic anchors have been secured, switch off the 24 VDC voltage and remove the spacer gauges from the openings in the drive unit. As you do this, ensure that the spacer gauges can be removed easily but do not have too much play since otherwise the magnet gap is too large. In this case the magnet gap adjustment process must be repeated.

Figure 9: *Adjusting the magnet gap with spacer gauges BF20-40*

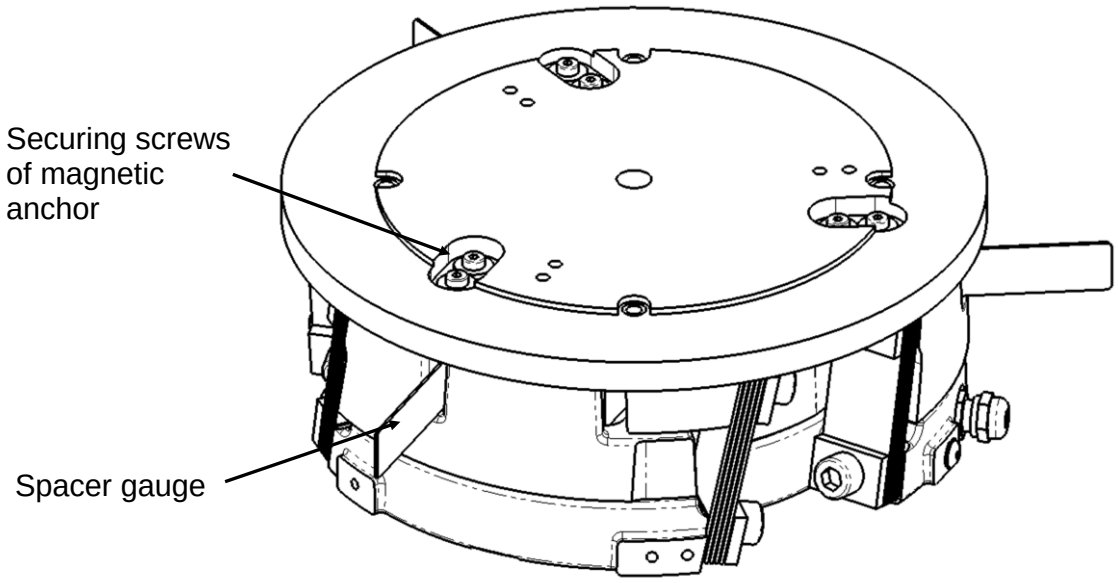

Figure 10: *Adjusting the magnet gap with spacer gauges BF50*

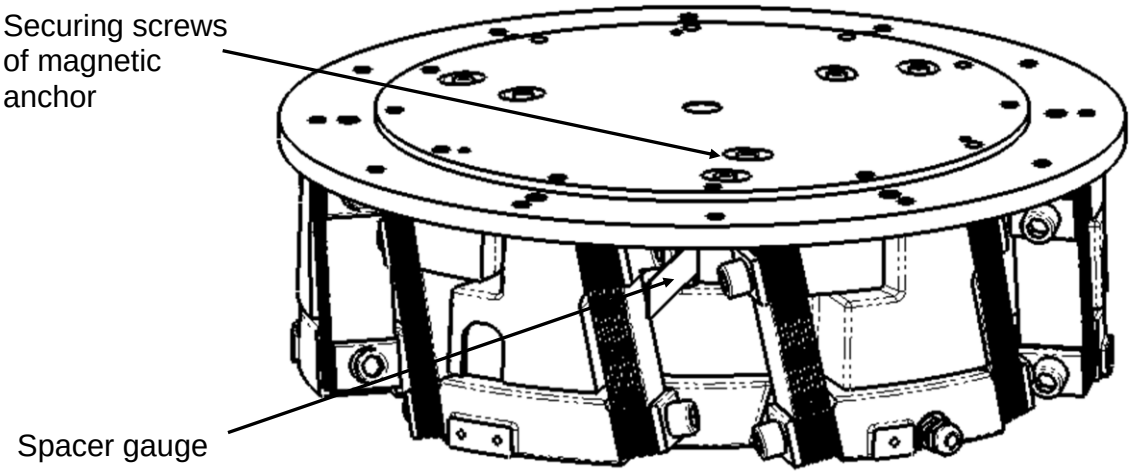

Table 4: *Magnet gap and tightening torque*

Typ	Unit	BF20	BF25	BF30	BF35	BF40	BF50
Air gap	[mm]	0,8	0,8	1,2	1,2	1,3	1,5
Tightening torque	[Nm]	2,8	2,8	5,5	5,5	5,5	9,5

5.3 Wear parts and Spare parts

Table 5: *Wear parts*

Designation		Order number
BF20	Leaf spring	50030807
	Spacer	50030808
	Rubber buffer	50041329
BF25	Leaf spring	50030807
	Spacer	50030808
	Rubber buffer	50041329
BF30	Leaf spring	15151865
	Leaf spring	50013514
	Spacer	50025641
	Rubber buffer	50041330
BF35	Leaf spring	15151865
	Spacer	50025641
	Rubber buffer	50041330

BF40	Leaf spring	50030852
	Spacer	50025641
	Rubber buffer	50041330
BF50	Leaf spring	50031626
	Spacer	50031627
	Rubber buffer	50041331

Table 6: *Spare parts*

Designation		Power supply	Order number
Magnet	BF20	230V/50Hz	50066426
		115V/60Hz	50066429
	BF25	230V/50Hz	50066426
		115V/60Hz	50066429
	BF30	230V/50Hz	15215514
		115V/60Hz	15138144
	BF35	230V/50Hz	15215514
		115V/60Hz	15138144
	BF40	230V/50Hz	15215514
		115V/60Hz	15138144
	BF50	230V/50Hz	15031196
		115V/60Hz	15160938

6 Accessories

6.1 Adjusting tools

Table 7: *Adjusting tools*

Typ	Order number					
	BF20	BF25	BF30	BF35	BF40	BF50
Centring bracket	50118490	50118517	50118531	50118597	-	-
Spacer gauge	50185535		50185536		50185537	50185538

6.2 Controller

The BF is connected to the 230V/50Hz AC system via an IRG or MSG controller and can be rated for other mains voltages and frequencies, e.g. 115V/60Hz. They operate in full-wave mode at double mains frequency, i.e. at 50Hz AC, with a vibration frequency of 100Hz.

Vibration displacement and thus the transport speeds are infinitely adjustable due to magnet current and thus magnetic force variability.

Soft-starting, all IRG and MSG types can be mounted in various different ways and offer extra controls for photoelectric barriers, initiator elements, or extern 24VDC signal. For a detailed description of the controllers refer full-range catalogue from Afag GmbH.

Third-party controllers can also be used as long as they meet the technical requirements.

Tabelle 8: *Controllers for BF- Bowl feeder*

Type	Power supply	Order number	Comments
IRG1-S	230V/50Hz	50360105	Control with no timer function
	115V/60Hz	50360106	External target value preset, the IRG1-S 115V/60Hz is not suitable for the BF50
MSG801	230V/50Hz – 115V/60Hz	50391818	With timer function, valve and inter-face outputs, sensor feed
MSG802	230V/50Hz – 115V/60Hz	50391819	With sensor feed

6.3 Address for orders

Germany:

Afag GmbH

Wernher-von-Braun-Straße 1

D – 92224 Amberg

Tel.: ++49 (0) 96 21 / 65 0 27-0

Fax: ++49 (0) 96 21 / 65 0 27-490

Sales

sales@afag.com

www.afag.com

Switzerland:

Afag Automation AG

Luzernstrasse 32

CH – 6144 Zell

Tel.: ++41 (0) 62 / 959 86 86

Fax: ++41 (0) 62 / 959 87 87

7 Disposal

BF feeders that are no longer in use should not be disposed of as complete units but dismantled into separate materials and recycled. Non-recyclable components must be disposed of correctly.